DELTA-THERM.COM

DELTA-THERM

Installation Instructions

DTC120-G, DTC120-S, AND DTC120-PS CONTROLS

DTC120-G Roof and Gutter Control

DTC120-S Slab Snow Melting Control

DTC120-PS Slab Snow Melting Control

CONTENTS page

SECTION 1. OVERVIEW
- 1.1 Precautions 2
- 1.2 Base model components 2
- 1.3 General accessories 2
- 1.4 Operation 2

SECTION 2. INSTALLING
- 2.1 Installing the DTC control panel 3
- 2.2 Installing the OTS-F1 thermostat 3
- 2.3 Installing the slab sensors for DTC120-S or DTC120-PS 4
- 2.4 DTC120-S and DTC120-PS wiring schematics 5
- 2.5 Slab snow melting mode system check 6
- 2.6 Installing the DTC120-G roof sensor(s) 7
- 2.7 DTC120-G wiring schematic 7
- 2.8 Roof de-icing mode system check 7
- 2.9 Installing the RID 8
- 2.10 Providing 120 VAC to contactor coils 9
- 2.11 Connecting to Mechanically Held contactors 9

SECTION 3. TESTING AND TROUBLE SHOOTING
- 3.1 Maintenance 10
- 3.2 System function test 10
- 3.3 Trouble shooting and Technical Support 10

Warning: The DTC120 must be installed by a qualified electrician. All assembly, installation, and test instructions must be followed. Improper installation can result in property damage, serious injury, or death due to electric shock. Please call Delta-Therm Corporation at 1-800-526-7887 with any installation or operating questions.

DELTA-THERM Corporation, P.O. Box 345, Wauconda IL, 60084 (847) 526-2407 Fax (847) 526-4456 **(800) 526-7887**

Section 1. Overview

1.1 PRECAUTIONS

- Installation must comply with local electrical codes.
- All related components and this control should be properly rated for the specified location classification.
- The control must be installed by a qualified electrician.
- The DTC control panel enclosure is rated NEMA 1 and must be located appropriately.

1.2 DTC120 BASE MODEL COMPONENTS

DTC120-S	DTC120-PS	DTC120-G
(1) DTC Control Panel	(1) DTC Control Panel	(1) DTC Control Panel
(1) MS Sensor	(1) PS Sensor	(1) GS Sensor
(1) OTS-F1 Thermostat	(1) SS Sensor	(1) OTS-F1
	(1) OTS-F1 Thermostat	

1.3 GENERAL ACCESSORIES

Accessories

Product Number	Description
MS	MS sensor for DTC120-S; (2) MS sensors can be installed with a DTC120-S
GS	GS sensor for DTC120-G; (4) GS sensors can be installed with a DTC120-G
R.I.D.	Remote indication and activation timer
SW-50	plenum rated four conductor #22 AWG MS and PS extension wire
RSW-50	non-plenum rated four conductor #18 AWG SS, GS, and RID extension wire

1.4 OPERATION

The DTC120 (120 VAC) is intended to control heating cable in the application of slab snow melting or roof and gutter de-icing. The DTC120 control unit receives low voltage input from an external slab or gutter sensor(s), ambient thermostat, and/or RID (remote indication device with timer).

The DTC control panel can receive input from one or two slab sensors or up to four roof and gutter sensors. The DTC120 provides one form C (NC, C, NO) dry contact rated at 20 amps (NO) and 10 amps (NC) for switching 120 VAC power to external contactor coils. The OTS-F1 enclosure may be placed indoors or outdoors. The OTS-F1 bulb must be placed outdoors in an area shielded from direct sunlight.

Locate the MS, PS, and SS sensor(s) between two cable runs in an area most indicative of snow fall. Do not locate the sensor(s) under trees, awnings, next to a structure, or in any location which may be blocked from snow.

The snow melting system will activates when the following three conditions are met:

1. The ambient temperature is less than the set point of 40°F (4.4°C).
2. The slab temperature is less than 40°F (4.4°C).
3. Snow or moisture is present on at least one MS moisture sensor, or on both PS and SS moisture sensors.

Once these conditions are met, the snow melting system remains activated until the slab temperature reaches 60 or the ambient temperature exceeds 40°F (4.4°C). The snow melting system then deactivates and remains deactivated until the three conditions reoccur.

The roof de-icing system will activates when the following two conditions are met:

4. The ambient temperature is less than the set point of 40°F (4.4°C).
5. Snow or moisture is present on at least one GS moisture sensor.

Once these conditions are met, the roof de-icing system activates and the DTC control panel checks at 35 minute intervals for moisture on the GS sensor(s). When no moisture is present on the GS sensor(s) the roof de-icing system deactivates and remains deactivated until the two conditions reoccur.

Section 2. Installation

2.1 INSTALLING THE DTC CONTROL PANEL

The DTC control panel is a NEMA 1 enclosure and must be located indoors in a dry location. Install the panel on a wall with free air circulation approx. 62” (1.6 m) above the floor.

1. Open the front cover by turning the ¼ turn latch with a screwdriver.
2. Attach the control panel to a surface with appropriate means utilizing the screw slots, one located near each of the four corners.
3. In the line voltage (left) section connect a .5” (1.27cm) conduit to the top of the control panel. This conduit will be used to route the following:
   - The 120 VAC line, neutral, and ground wires to the control panel.
   - The hot wire to the control panel for switching power to an external contactor panel.
   - The switch-leg from the control panel to an external contactor panel.
4. In the low voltage (right) section connect conduit to the top of the control panel. This conduit will route two low voltage wires to an ambient thermostat, a 4-conductor control cable to any slab sensors or a 4-conductor control cable to any roof and gutter sensors and/or a 3-conductor control cable to the optional remote indicator/timer device (RID).

Note: The DTC does not provide 120 VAC to contactors directly. You must place a jumper wire from TA-1 to TA-3 to directly switch the 120 VAC power to the DTC to the contactors.

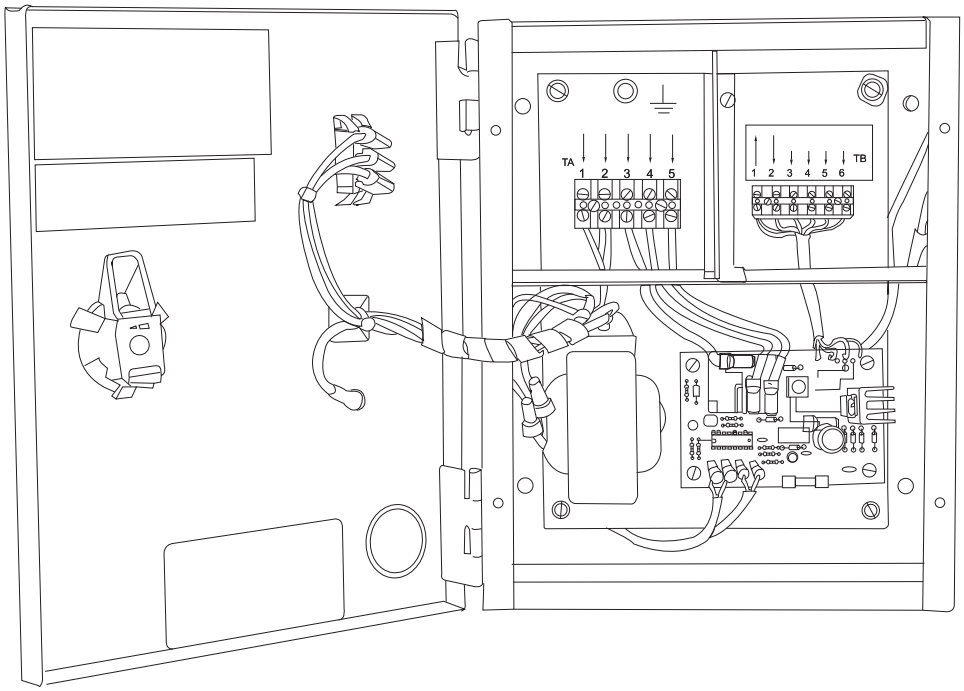

Detail 1. DTC control panel.

2.2 INSTALLING THE OTS-F1 THERMOSTAT

Locate the thermostat bulb outdoors and out of direct sunlight. Locate the thermostat either indoors or outdoors. The thermostat’s contacts close at 40°F (4.4°C) and below. Make the low voltage class two connections between the thermostat and the control unit using two conductors.

2.3 INSTALLING THE SLAB SENSOR(S) FOR DTC120-S OR DTC120-PS

Locate the area most indicative of snow and moisture exposure for slab sensor installation. Do not locate sensors under shrubs, awnings, parking spaces, or in any location which may be blocked from snow. Do not place sensors in the direct path of tires due to moisture that can cause false system activation.

Note: Place duct tape over top surface of slab sensor to prevent concrete or asphalt from entering space between housing and sensor plate. Remove prior to system check and operation.

1. The slab sensor is approximately 5” (12.7cm) in diameter and 4” (10.16cm) tall. In the heated area of the slab embed the sensor between two equidistant heating cable runs flush with the concrete or asphalt surface.
2. Position the sensor with the capped conduit nipple containing the temperature sensor parallel with the heating cables.
3. Attach a .75” (1.91cm) rigid conduit to the sensor and to an appropriate junction box or the control unit. PVC pipe can be used in a concrete slab if allowable by code.
4. The area under the sensor may require digging if the slab is less than four inches. A leveling support (concrete block or other suitable means) may be required under the sensor for positioning.
5. Recess to accommodate sensor necessary. The sensor probe must be in heated area of concrete or asphalt.

Note: Conduit, block, or other installation material not supplied by Delta-Therm.

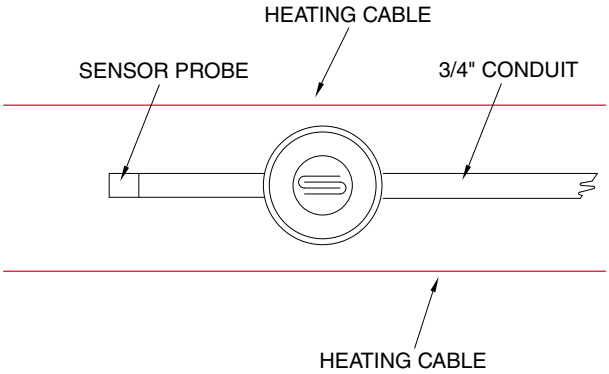

Detail 2. Plan view of a slab sensor.

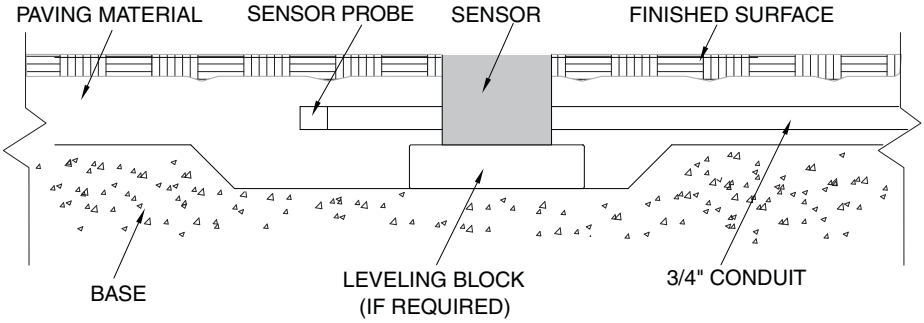

Detail 3. Side view of slab sensor.

2.4 DTC120-S AND DTC120-PS WIRING SCHEMATICS

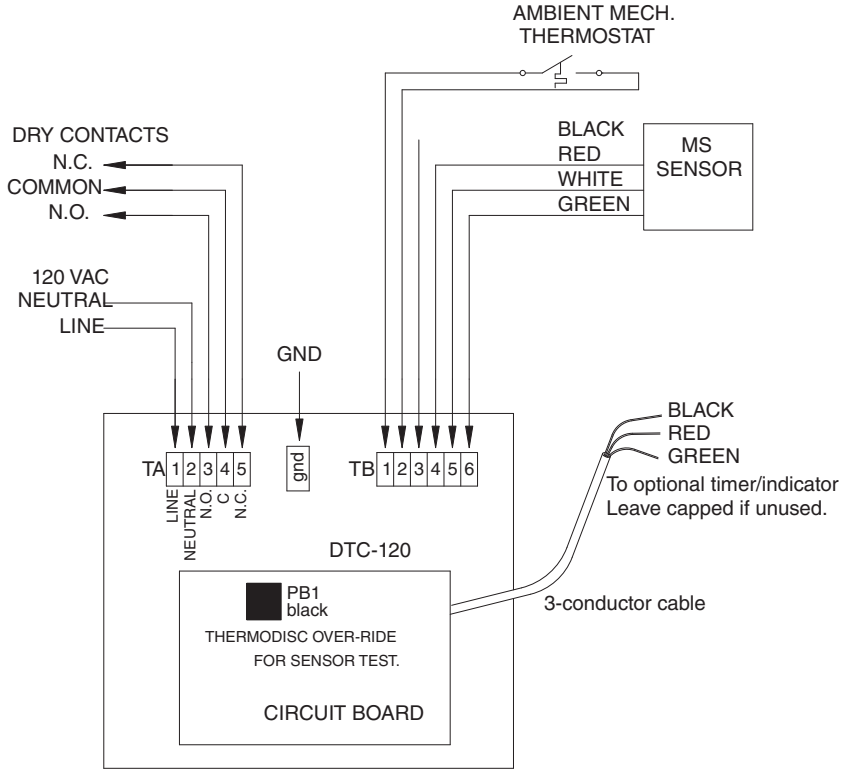

Detail 4. DTC120-S wiring for one main slab sensor.

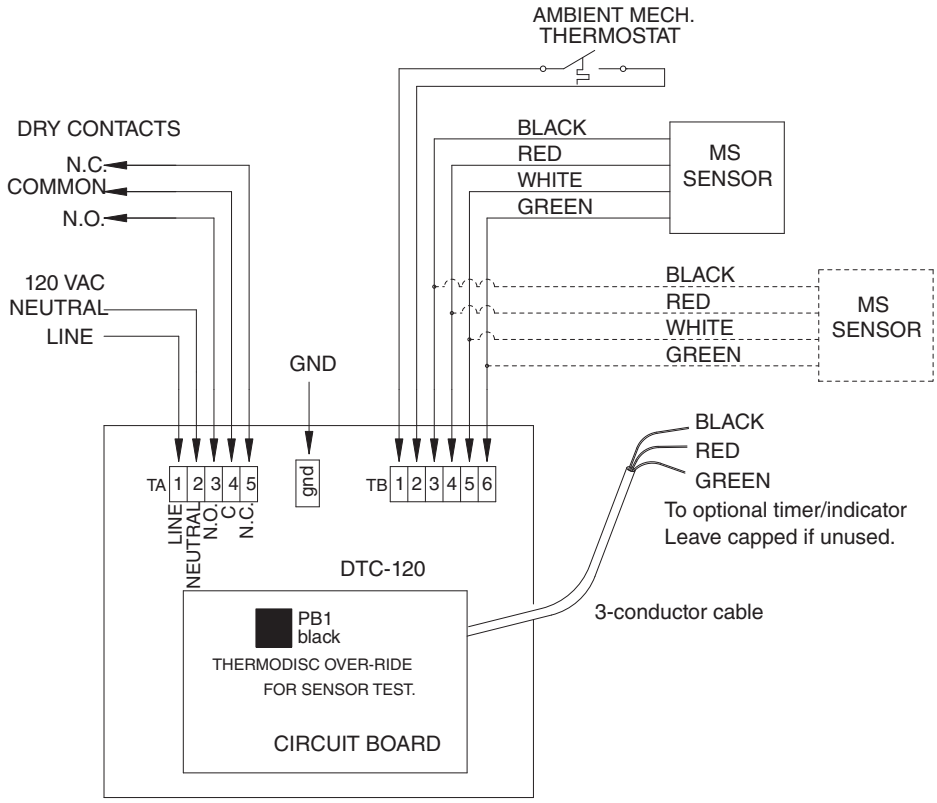

Detail 5. DTC120-S wiring for two main slab sensors. Wire the two sensors in parallel by matching wire colors.

2.4 DTC120-S AND DTC120-PS WIRING SCHEMATICS

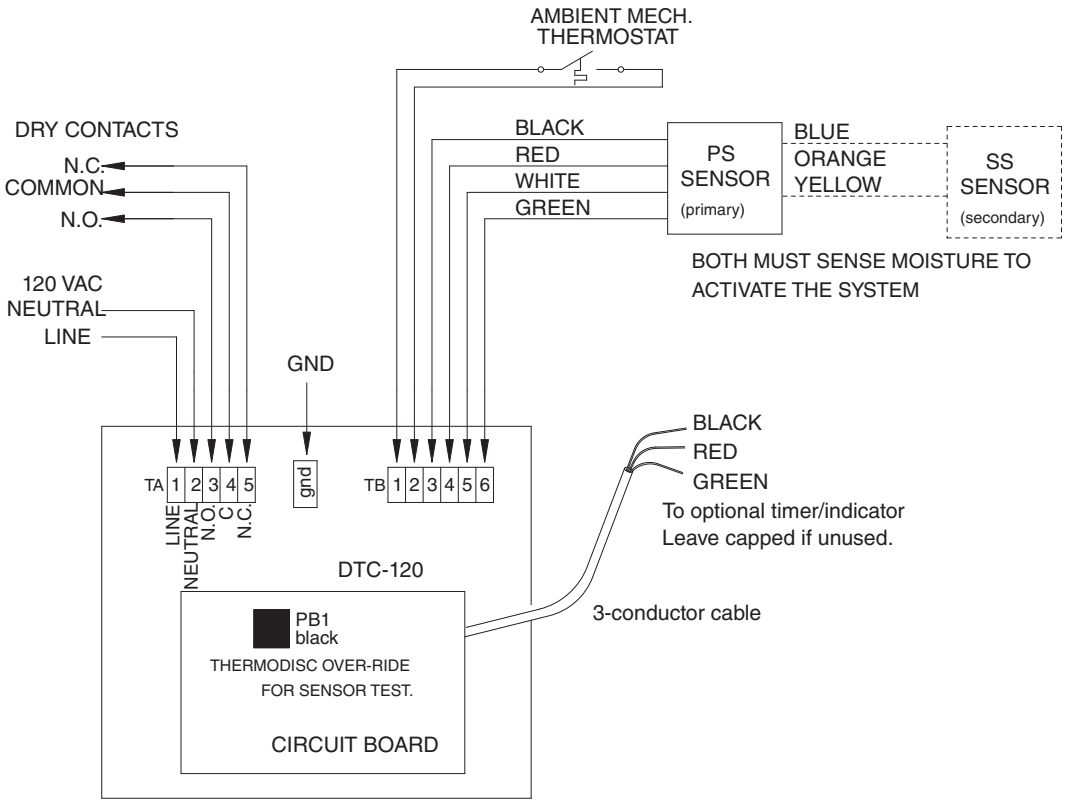

Detail 6. DTC120-PS wiring for PS and SS sensors.

2.5 SLAB SNOW MELTING MODE SYSTEM CHECK

1. Verify 120 VAC across TA1 and TA2.
2. Turn on power switch and verify that the switch illuminates.
3. Pour water on a sensor (or sensors if the slab sensors are wired primary and secondary).
4. If ambient temperature is above 40°F (4.4°C) and/or the slab temperature is above 60°F +/- 5 (15°C), press the .3” x .3” (7.62 X 7.62mm) black push button on the circuit board. This will activate the system and close the normally open contacts across TA3 and TA4 as well as activate the contactor coil(s) if the contactor power is wired correctly.

2.6 INSTALLING THE DTC120-G ROOF SENSORS

Place the sensor(s) inside of the gutter(s) in a location most indicative of snow and/or ice exposure. The sensor(s) is low voltage class two wiring to be installed per code. Sensor(s) can be mechanically attached to the inside bottom of the gutter. The U shaped sensing elements are not to contact any metal surface.

2.7 DTC120-G WIRING SCHEMATIC

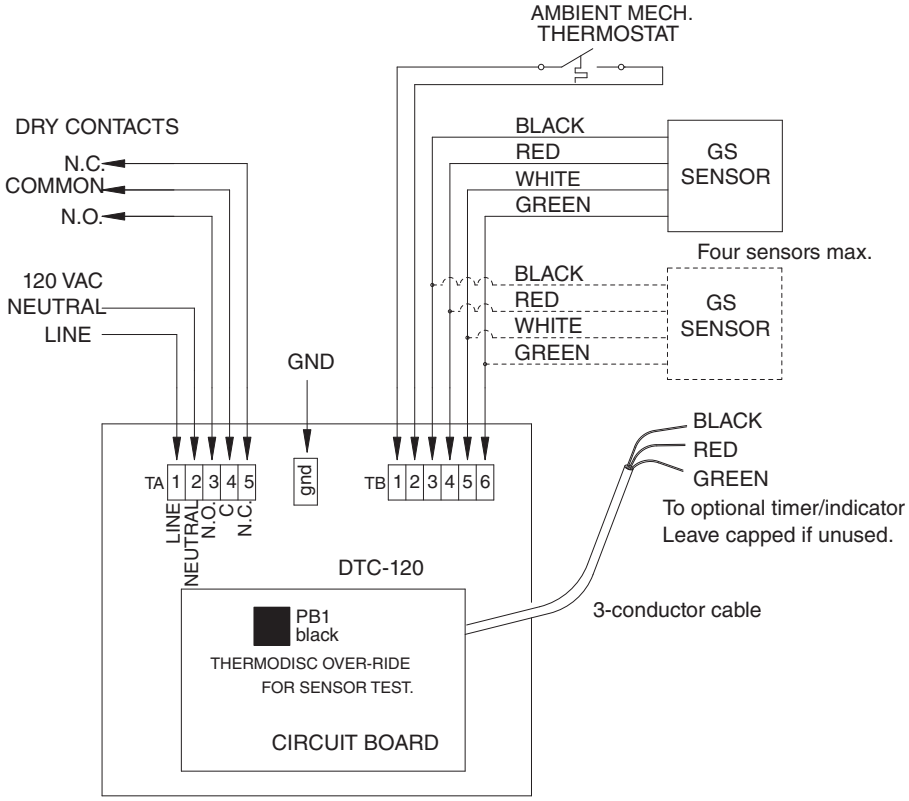

Detail 6. DTC120-G wiring for GS sensor(s). Wire up to four sensors in parallel by matching wire colors.

2.8 ROOF DE-ICING MODE SYSTEM CHECK

1. Verify 120 VAC across TA1 and TA2.
2. Turn on power switch and verify that the switch illuminates.
3. Pour water on a sensor.
4. If ambient temperature is below 40°F (4.4°C) system should activate. If ambient temperature is above 40°F (4.4°C) press the .3” x .3” (7.62 x 7.62mm) black push button on the main circuit board. This will activate the system and close the normally open contacts across TA3 and TA4 as well as activate the contactor coil(s) if the contactor power is wired correctly.

Dry sensor, reset power, and repeat procedure for each sensor installed

2.8 INSTALLING THE RID

1. Fit the RID in a standard single gang electrical box opening.
2. Route a three conductor cable or three individual conductors between the RID and control unit.
3. Connect the black wire of the RID cold lead to the black wire of the control unit cold lead. Connect the white wires and the green wires respectively. Use 20 AWG wire minimum.

On the back of the RID is a jumper. For slab snow melting the jumper should be in the left position as you face the back of the device, covering the left and center metal pins. This activates the system for approximately 5 hours. For roof and gutter de-icing the jumper should be in the right position, covering the right and center pins. This activates the system for approximately 75 minutes.

The RID alone can activate the system. When the RID activates the system the bottom red light will be on to indicate power and the top red light will blink on/off to indicate that the system is being activated by the timer. The system will either turn off when the RID times out or remain activated by the sensor(s). When a sensor activates the system after the RID has timed out, the bottom red light will be on but the top red light will be off. The RID reset function will only reset the RID and turn off the system if no sensors are requiring system activation. If a sensor is requiring system activation and the timer reset button is pushed, the timer will stop but the system will remain on until the sensor is satisfied.

Locate the thermostat bulb outdoors and out of direct sunlight. Locate the thermostat either indoors or outdoors. The thermostat's contacts close at 40°F (4.4°C) and below. Make the low voltage class two connection between the thermostat and the control unit using two conductors.

The illuminated power on switch indicates the DTC120 is on and the system is ready for activation.

The red LED light on the control unit front cover illuminates upon heating system activation.

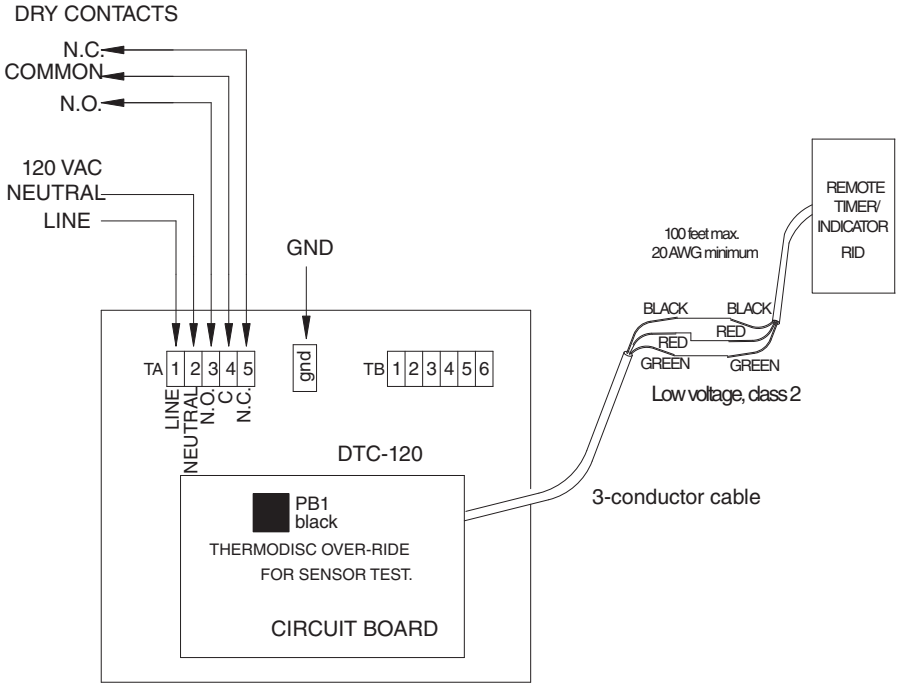

Detail 7. DTC120 control panel wiring to RID.

2.9 PROVIDING 120 VAC TO CONTACTOR COILS

Wiring for the Controller to Provide 120 VAC to Contactor Coils can be done as follows.

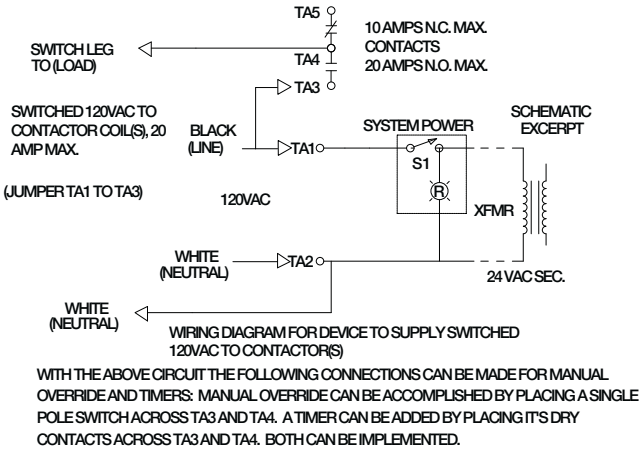

Detail 9. Schematic to connect contactors, timer, and manual override.

2.10 CONNECTING TO MECHANICALLY HELD CONTACTORS

Note: The DTC does not provide 120 Vac to contactors directly. You must place a jumper wire from TA-1 to TA-3 to directly switch the 120 VAC power to the DTC to the contactors.

Connecting the Controller to a Mechanically Held Contactor(s) can be done as follows. The DTC120 contacts are a single pole double throw switch for contactors, either electrically held or mechanically held.

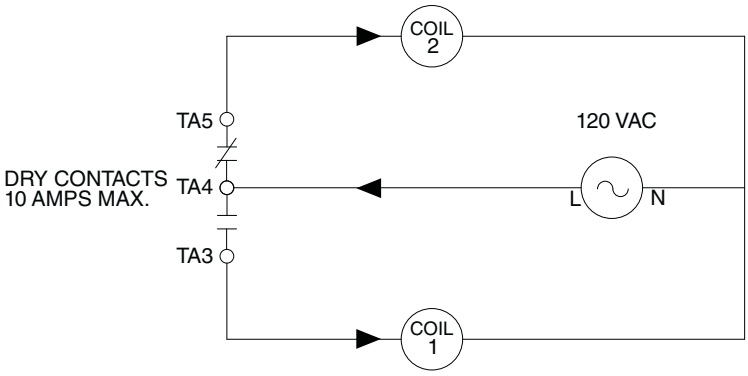

Detail 10. Wiring diagram for mechanically held contactor(s).

With the above circuit the following connections can be made fro manual override and timers: Manual override can be accomplished by placing a single pole switch across TA3 and TA4. A timer can be added by placing it's dry contacts across TA3 and TA4. Both can be implemented.

DTC 120LT Schematic to connect contactors, timer, and manual override.

Section 3. Testing and Trouble-Shooting

3.1 MAINTENANCE

The surface of the sensors should be cleaned annually with an abrasive pad or other means to remove dirt, grime, leaves, or any debris which could interfere with exposure to snow or ice. The system functional check should be performed prior to the start of each cold season.

3.2 SYSTEM FUNCTION TEST

CAUTION: More than one voltage source may be present in the controller if it is used to switch a separate power source.

Upon completion of all wiring perform the following steps:

1. Apply 120 VAC power to the controller and power for the contactor coils (if separate).
2. Switch on control power switch, illumination of the switch confirms power is present.
3. Pour approximately ¼ cup of water on one sensor. If the ambient temperature is less than the thermostat set-point and the slab (if slab heating is the mode of operation) is less than 40°F. +/- 8°F. (4.4°C), the red indicating light on the controller door will illuminate and the contactor coils will energize.
4. If the prior temperature conditions are not met, press the black square push-button mounted on the circuit board (ensure there is water on the sensor). This will activate the system.
5. Dry the sensor which was checked and repeat procedure for any additional sensors.
6. Verify the ambient thermostat is wired per instructions.
7. Verify the optional RID timer function activates the controller.
8. If any step does not function verify all field wiring.

3.3 TROUBLE-SHOOTING AND TECHNICAL SUPPORT

To be done by a qualified technician only.
Following are potential system and installation problems and solutions for the DTC120 controller.

Prior to the procedures:

- Verify there is 120 VAC across terminals TA1 and TA2 as shown on the wiring diagrams.
- Verify all field wiring.
- Verify the normally open contact, TA3 and TA4, are used as a single pole switch for switching power to external contactors.
- Verify power is available for the contactor coils.
- Verify the contactor coil voltage is present across TA3 and TA4.
- Verify all sensors are wired as shown in the installation documents.
- Verify the ambient thermostat is connected across TB1 and TB2.
- If the RID option is installed verify the three conductor cold lead in the low voltage section is connected to the RID keeping the wire insulation color code integrity. Refer to section 5, Detail 8.

For additional Trouble-Shooting Procedures, please contact Delta-Therm Technical Support for DTC120 Operations and Trouble-Shooting Manual.

If you have any questions or comments about these instructions, or your installation please call Delta-Therm between the hours of 8:00 a.m. - 5:30 p.m. CST, Monday through Friday at 1-800-526-7887.