DELTA-THERM.COM

DELTA-THERM

Installation Instructions

CONSTANT WATT (CW) AND SELF-REGULATING (SR) PIPE TRACING CABLES

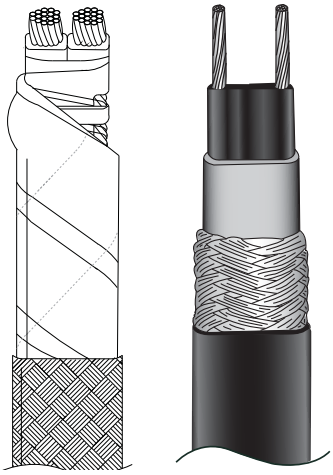

Constant Watt Cable

Self-Regulating Cable

CONTENTS page

SECTION 1. OVERVIEW

1.1 Precautions 2
1.2 Cable and components 2
1.3 General accessories 2
1.4 Tools recommended 3
1.5 Site plan 3
1.6 Cable storage 3
1.7 Cable labeling 3
1.8 Cable testing 3
1.9 Site preparation 3
1.10 Proper cable handling 3
1.11 N.E.C. code 3
1.12 Conduit and circuit wire 3

SECTION 2. INSTALLATION

2.1 General Information 4
2.2 Fastening cable to pipe using T-F and T-AL tapes 4
2.3 Cable allowance chart 4
2.4 Installation 5

SECTION 3. TESTING AND TROUBLE-SHOOTING

3.1 Pre-installation testing 10
3.2 Monitoring cable during installation 10
3.3 Final testing 10
3.4 Maintenance 10
3.5 Trouble-shooting and technical support 10

Warning: Constant Watt and Self-Regulating Cable must be installed by a qualified electrician. All assembly, installation, and test instructions must be followed. Improper installation can result in property damage, serious injury, or death due to electric shock. Please call Delta-Therm Corporation at 1-800-526-7887 with any installation or operating questions.

DELTA-THERM Corporation, P.O. Box 345, Wauconda IL, 60084 (847) 526-2407 Fax (847) 526-4456 **(800) 526-7887**

Section 1. Overview

1.1 PRECAUTIONS

Please read these Installation Instructions and all instructions included with kits prior to installation. Observe all warnings. Visually inspect the cable for damage. The cable, including braid, must not be cut, nicked or worn. DO NOT USE DAMAGED CABLE.

- Install cable in accordance with the prevailing electric code.
- Cables for classified areas should be tagged for specific classifications.
- All related components and controls should be properly rated for the specified location classification.

1.2 CABLE AND COMPONENTS

Each constant watt and self-regulating cable circuit will require at least one power connection kit (sold separately) which includes one end termination. All cable ends must be properly terminated per the instructions. Directions to preform the power connection, T or in-line splice, and end termination are included with the kit.

1.3 GENERAL ACCESSORIES

Accessories

Product Number	Description
PCK-TT, PCK-C6, PCK-IN, PCK-HT, PCK-HLC	Power Connection Kits for self-regulating cables. Please consult datasheet to verify that you are using the listed kit for your cable.
ETK-IN, ETK-HT	End Termination Kits for self-regulating cables. Please consult datasheet to verify that you are using the listed kit for your cable.
SPK-IN	Splice Connection Kit for self-regulating cables. Please consult datasheet to verify that you are using the listed kit for your cable.
CL-S/CL-L	Small And Large Caution Labels
DT-Box	Weatherproof 2 Gang Aluminum Box With Five .75" (2cm) Hubs And Cover
PC1, PC2	Weatherproof 2 Gang Polycarbonate Boxes.
T-ALXXX	Aluminum Heat Distribution Tape
T-FXXX	Fiberglass Banding Tape

Panels

Product Number	Description
DT-XXPXXX	Enclosed Contactor Panel
GFPE-X-X-X	Power Control Panel w/GFPE
LNR-X	Low Noise Relay Panel
Custom Control/Monitor/Alarm Panels	

Controls

Product Number	Description
Master Trace	Multi-circuit load switching thermostat device with monitoring & line sensing
Trace Mates	Single and dual circuit load switching thermostat device with monitoring & line sensing
PowerTrace etc1	Single circuit load switching thermostat device with monitoring & line sensing
OTS-F1	Fixed Ambient or Line Sensing Thermostat in NEMA 4X Enclosure
OTS-1A	Adjustable Line Sensing Thermostat in NEMA 4X Enclosure
OTS-2A	Adjustable Ambient Sensing Thermostat in NEMA 4X Enclosure
OTS-3A	Adjustable Line Sensing Thermostat in NEMA 4, 7, 9 Enclosure

Product Number	Description
OTS-4A	Adjustable Ambient Sensing Thermostat in NEMA 4, 7, 9 Enclosure
A419ABC-1C	Adjustable Line or Ambient Sensing Thermostat With Key Pad and LCD Display in NEMA 1 Enclosure
A419AEC-2C	Adjustable Line or Ambient Sensing Thermostat With Key Pad and LCD Display in NEMA 4X Enclosure
A19ABC-24	Adjustable Line Sensing Thermostat in NEMA 1 Enclosure
A19ANC-1C	Adjustable Line Sensing Thermostat in NEMA 3R Enclosure
E55-E21BSS	Adjustable Line Sensing Thermostat NEMA 4 Enclosure

1.4 TOOLS RECOMMENDED

- 500 VDC insulation resistance tester
- Flat head screwdriver
- Digital multimeter
- Fish tape
- Clamp-on ammeter
- Adjustable wrench

1.5 SITE PLAN

Delta-Therm offers engineered drawing services as outlined in our Price List. If drawings were ordered, please compare the drawing bill of materials to materials supplied with your order and verify that you received all of the Delta-Therm components. Before starting the installation verify the proper location and layout of heating cable(s), control(s), and/or accessories.

1.6 CABLE STORAGE

All CW and SR cable should be stored in a cool, dry location. Cables should be protected from damage. Follow the cable testing instructions provided in Section 3 and test all cables removed from storage. Record the readings on the warranty card.

1.7 CABLE LABELING

Delta-Therm constant watt cables are FM Approved for pipe trace applications. Delta-Therm self-regulating cables are UL Listed, FM Approved or CSA Certified for pipe trace applications. Each cable has rating and listing data printed on the outside of the cable jacket (you may have to pull braid back to read the printing).

1.8 CABLE TESTING

Please refer to Section 3 for all cable testing procedures.

1.9 SITE PREPARATION

Review installation, engineering, electrical, and or architectural drawings prior to installation. Verify that available voltage is the same as the cable operating voltage indicated on the UL or CSA label. Install conduit from the cable feed points, to an indoor junction box, the power panel or dry junction box, continuing to power plan per site plan. Install appropriate grounding system per prevailing electrical code.

Verify and measure the pipes to be traced. Pressure test all pipes for leaks. Clean of any dirt or corrosive materials from outside of pipe and dry pipe. Refer to the cable allowance chart for cable footages on the various items. Provide power to the start of the pipe trace.

Apply Delta-Therm T-AL200 or T-AL400 aluminum heat transfer tape on the outside of PVC, fiberglass, or other non-metallic pipes where the cable is to be installed. When installing constant watt cable, apply two layers of T-AL tape, one layer under and the other layer over the cable. When installing self-regulating cable, apply one layer over the cable.

Apply Delta-Therm T-AL200 or T-AL400 aluminum heat transfer tape on the outside of metal pipes only when constant wattage cable is to be installed. Apply one layer over the cable.

1.10 PROPER CABLE HANDLING

Always unroll the constant watt or self-regulating cable. Do not pull the cable in a helix fashion.

1.11 NEC CODE

Please refer to: NEC Section Article 427 Fixed Electric Heating Equipment for Pipelines and Vessels.

1.12 CONDUIT AND CIRCUIT WIRE

The cables require a permanently wired and grounded conduit system. Use only UL Listed (CSA Certified) weatherproof junction boxes.

Section 2. Installation

2.1 GENERAL INFORMATION

Before starting the installation please refer to Section 1.5 Site Plan, Section 1.9 Site Preparation, and test cables following the directions in Section 3.1 Pre-Installation Testing.

Install cable in straight runs. Allow additional cable and tape for valves, pipe hangers and un-insulated pipe passing through walls as shown in the details on the following pages. Do not wrap cable around pipe hangers. Refer to the Cable Allowance Chart below. The minimum cable bend radius is 1".

Allow 12" of cable for every power supply connection or splice. When installing constant watt cable, locate the heating zone, and add 12" before the heating zone when cutting the cable. Please refer to the specific constant wattage cable datasheet for help in locating the heating zone.

Install waterproof insulation. Be sure there is a full thickness of insulation between the pipe and all hangers and supports.

Attach "Caution Label" (CL-L or CL-S) on each side of pipe every 10 feet.

2.2 FASTENING CABLE TO PIPE USING T-F AND T-AL TAPES

Constant watt cable: Install both the T-F series fiberglass banding tape and the T-AL series aluminum heat transfer tape. Use the T-F fiberglass banding tape, on both metal and non-metallic pipes to hold cable onto the pipe, install tape every 12". On metal pipe install T-AL aluminum heat transfer tape along the length of the pipe, covering the cable. On non-metallic pipe install T-AL aluminum heat transfer tape under and over the cable.

Self-regulating cable: You may need to Install both the T-F series fiberglass banding tape and the T-AL series aluminum heat transfer tape. Use the T-F fiberglass banding tape, on both metal and non-metallic pipes to hold cable onto the pipe, install tape every 12". On non-metallic pipe install T-AL aluminum heat transfer tape over the cable.

2.3 CABLE ALLOWANCE CHART

Cable Allowance Chart

PIPE SIZE	SCREW VALVES	FLANGE VALVES	BUTTERFLY VALVES	PIPE SUPPORTS	PIPE ELBOWS	PIPE FLANGE
1"	6"	6"	6"	6"	3"	3"
2"	6"	1'	6"	1'	6"	6"
3"	1'	2'	1'	1'	6"	6"
4"	2'	3'	1'	1'	9"	6"
6"	3'	4'	1'	2'	9"	1'
8"	4'	5'	2'	2'	9"	1'
10"	5'	7'	2'	3'	1'	1'
12"	7'	8'	2'	3'	1'	1'
14"	8'	10'	3'	4'	1'	2'

2.4 INSTALLATION

Although most pipes are single traced, there are circumstances where a pipe may require multiple traces. For double-trace position cable on the lower third of the pipe, at the four o'clock and the eight o'clock positions. Cut and store any remaining cable. For more than a double-trace refer to the installation drawing package if ordered.

Make power connections, splices, and terminations per the instructions included with the kit. Please consult with your factory representative or Delta-Therm for items not covered in this guide.

The minimum cable installation temperature is -5° F.

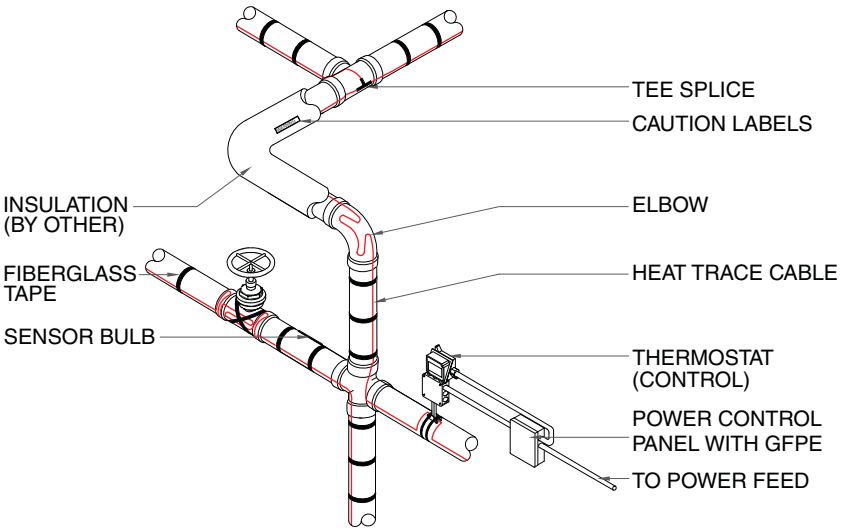

Detail 1. Typical cable installation with thermostatic control.

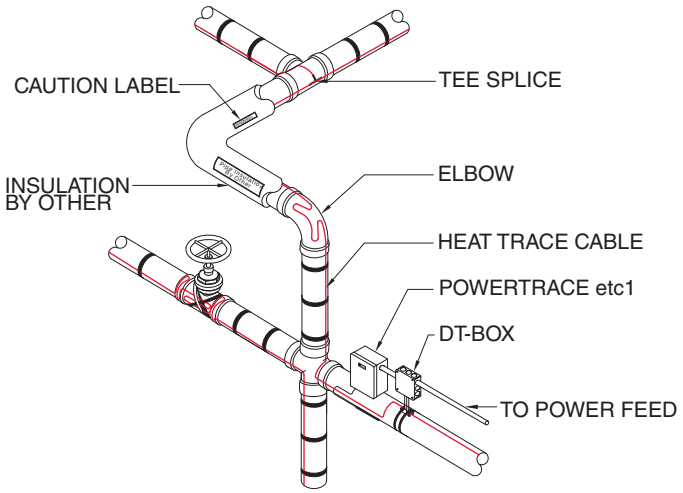

Detail 2. Typical cable installation with PowerTrace etc1, TraceMate, or MasterTrace control.

2.4 INSTALLATION

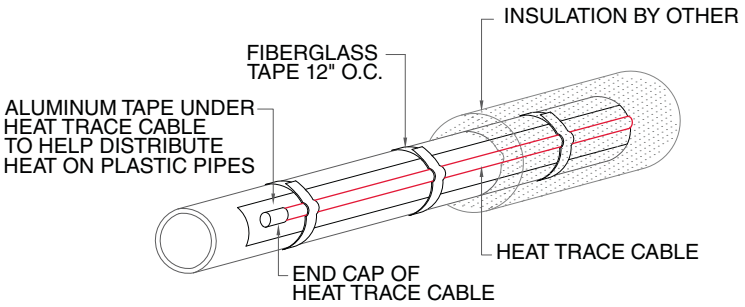

Detail 3. Typical heat trace cable termination. Please refer to Section 2.2 for proper placement of aluminum tape.

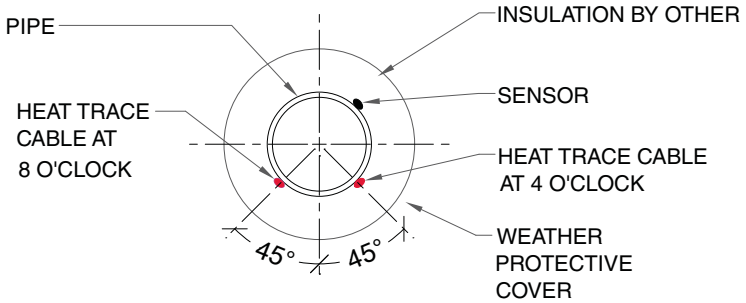

INSULATE OVER ENTIRE PIPE AREA.

ALL INSULATION TO BE PROTECTED FROM WEATHER USING APPROVED METHODS.

Detail 4. For multiple traces locate multiple cables at the 4 and 8 o'clock positions. On line sensing thermostats locate the sensor at the 2 o'clock position.

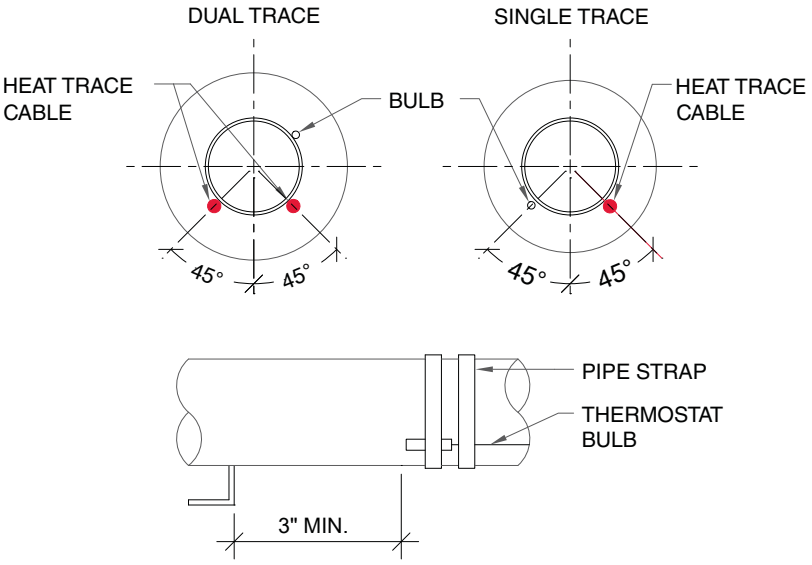

Detail 5. On line sensing thermostats, mount the thermostat bulb at the 2 o'clock position on dual trace and at the 8 o'clock position on single trace systems. Locate the bulb at least 3" away from fixtures.

2.4 INSTALLATION

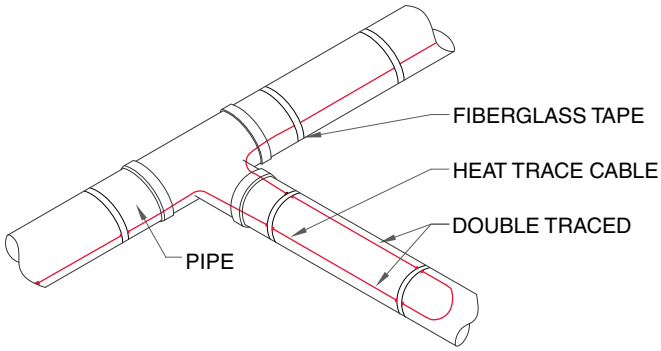

Detail 6. Heat trace cable at pipe union.

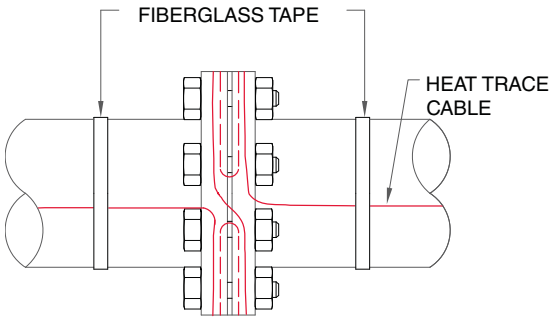

Detail 7. Heat trace cable on flange.

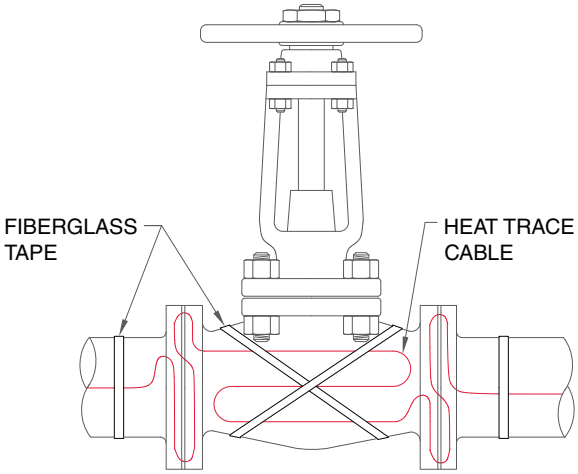

Detail 8. Heat trace cable on flange valve.

2.4 INSTALLATION

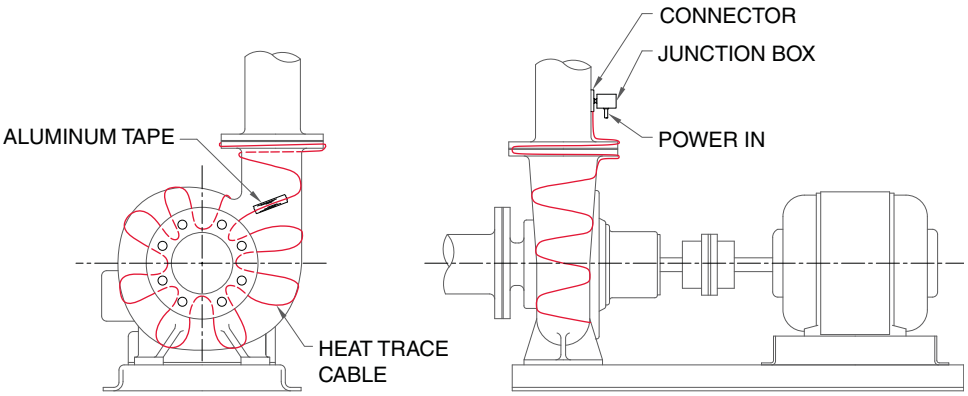

Detail 9. Heat trace on circulator (tape cable to circulator using aluminum tape.)

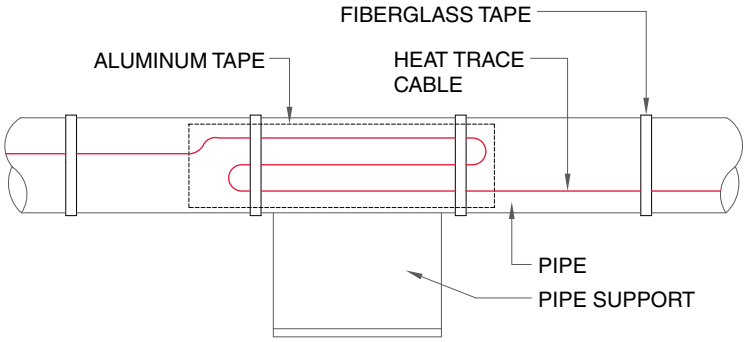

Detail 10. Heat trace on pipe support.

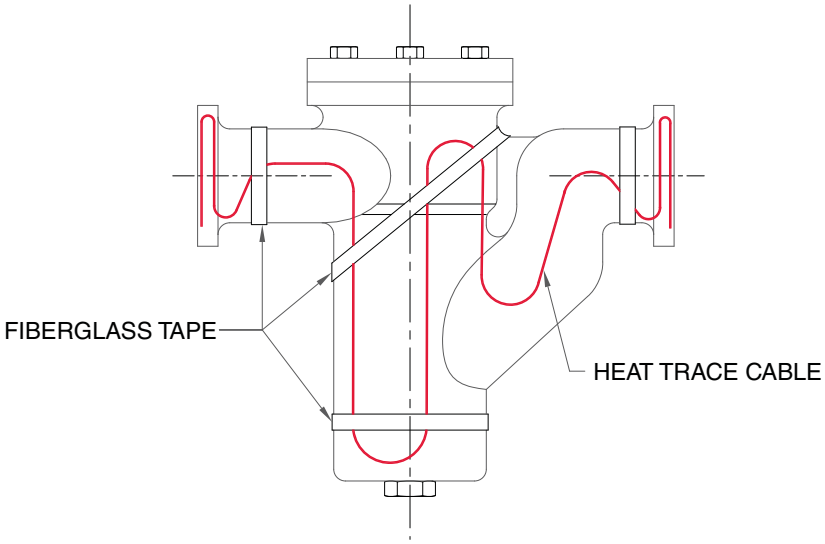

Detail 11. Heat trace on basket strainer.

2.4 INSTALLATION

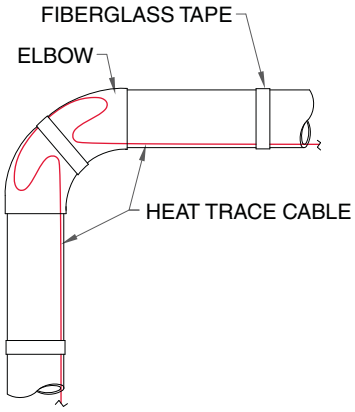

Detail 12. Heat trace cable on elbow.

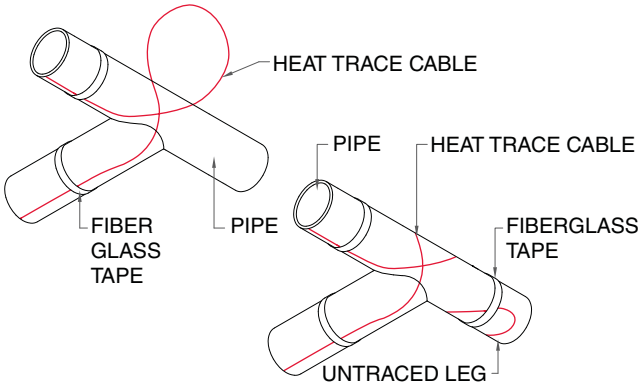

Detail 13. Heat trace cable on untraced pipe leg.

Section 3. Testing and Trouble-Shooting

3.1 PRE-INSTALLATION TESTING

Unpack the cable and test each cable for insulation resistance (IR) and total resistance (TR).

To test IR, connect one lead of a 500 VDC insulation resistance meter (megger) to one bus wire and the other lead to the cable braid. IR should be greater than 10 megohms. Test in accordance with the meter manufacturer's instructions.

To test TR, connect one lead of the 500 VDC insulation resistance meter (megger) to each bus wire. Test in accordance with the meter manufacturer's instructions. For self-regulating cable TR will fluctuate with ambient temperature and for constant wattage cable TR will remain constant.

Please enter the following information on the warranty card: IR reading, TR reading, ambient temperature at time of reading, and length of cable on the circuit.

3.2 MONITORING CABLE DURING INSTALLATION

Repeat the tests as described in Section 3.1 and enter the information on the warranty card. If there is a change in the meter reading, please check the cable for damage, as well as the power connections, splices, and end terminations.

3.3 FINAL TESTING

Repeat the TR tests as described in Section 3.1. To test IR, connect one lead of the 500 VDC to the cable cold lead and the other to building ground/cable braid. Enter the information on the warranty card. If there is a change in the meter readings, please check the cable for damage, as well as the power connections, splices, and end terminations.

3.4 MAINTENANCE

Annually check system for loose or damaged cable.

3.5 TROUBLE-SHOOTING AND TECHNICAL SUPPORT

If during any test the meter readings vary by +/- 10% from the previous test, stop the installation and investigate. Please check for pinched or crushed cables, test splices, test power connections, test end terminations, and repair accordingly. Check for water in all junction boxes or conduit. Any faults should be repaired by a qualified electrician or factory technician.

For additional trouble-shooting and repair procedures, please contact Delta-Therm technical support at 1-800-526-7887. Please be prepared to provide:

- Part numbers for all installed equipment
- IR and TR readings on all installed cables
- Verification that incoming voltage matches design voltage of Delta-Therm equipment
- Verification that you have checked all wiring, junction boxes, etc.
- Digital photos of installed equipment

If you have any questions or comments about these instructions or your installation please call Delta-Therm at 1-800-526-7887.