DELTA-THERM.COM

DELTA-THERM

# Installation Instructions

# MPS

## Slab Snow Melting Or Roof And Gutter Deicing Control

**CONTENTS**

**Section 1.** Overview
General
Materials

**Section 2.** Installing the MPS
Electrical Rough-In
Connecting MMP Sensor to MPS Control Panel
Installing the RID

**Section 3.** Testing and Trouble-Shooting
System Function Check
Trouble-Shooting

**Section 4.** Maintenance

**DELTA-THERM** Corporation, P.O. Box 345, Wauconda IL, 60084 (847) 526-2407 Fax (847) 526-4456 **(800) 526-7887**

## Section 1. Overview

**1.1 GENERAL**

The MPS control panel can be installed outdoors or indoors. It can be installed under a roof eave near the MMP sensor or remotely located using optional extension wire to connect the MMP sensor.

The MMP sensor is placed in the gutter when the MPS is installed to control a roof deicing system. When the MPS is installed to control a snow melting system the MMP sensor is placed in an area that is most indicative of snow conditions. Do not locate the MMP sensor under trees, awnings, next to a structure, or in any location which may be blocked from snow.

The MPS control panel must be installed by a qualified electrician.

The MPS can switch up to 24 amps directly or switch larger loads by controlling contactors.

**1.2 MATERIALS**

1 Control panel (MPS)

1 Ambient temperature and moisture sensor (MMP)

1 Remote indicator and activation timer (RID); optional

1 Cord grip for the MMP

1 .75” (19.05mm) Conduit fitting

1 Installation instructions

## Section 2. Installing the MPS

### 2.1 INSTALLING THE MPS CONTROL PANEL

Mount the MPS control panel horizontally with the door hinge underneath (the door should swing down to open). Mount the panel using attachment method appropriate for the surface. Refer to Detail 1.

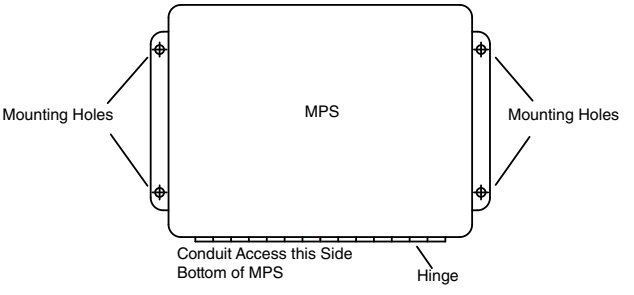


**Detail 1.** Installing MPS Control Panel

### 2.2 ELECTRICAL ROUGH-IN

1. Connect .5" (12.7mm) conduit for line voltage in the pre-punched hole on the bottom right of the control panel.
2. If the MPS is switching the heating cable directly:
   a. Route either 120, 208, or 240 VAC line, neutral, and ground wires through the conduit to the MPS control panel. Refer to Detail 2.
   Note: The MPS requires a neutral with any supply voltage.
   b. Connect .5" (12.7mm) conduit in the pre-punched hole on the bottom right and route power to heating cable.

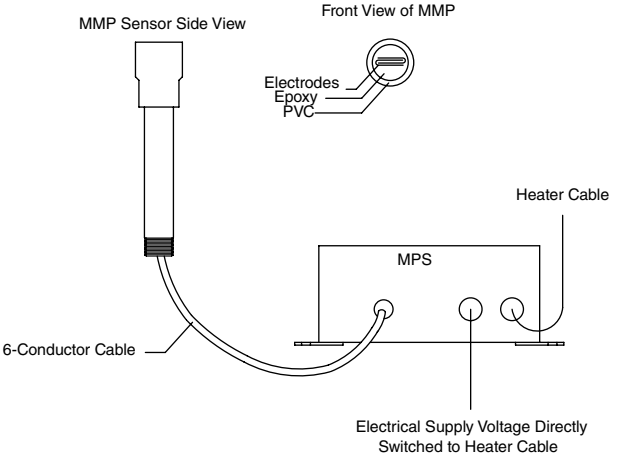


**Detail 2.** Electrical rough-in when MPS is switching load

Note: The MPS requires a neutral with any supply voltage. The MPS switches power on one current carrying conductor only.

## Section 2. Installing the MPS

3. If a contactor panel is switching the heating cable load. Refer to Detail 3.
   a. Route either 120, 208, or 240 VAC line, neutral, and ground wires through the conduit to the MPS.
   b. Seal any unused conduit opening in the MPS with an appropriate knock-out plug.
   c. Use the orange #10 awg lead wire in the MPS as the switch leg for the contactor coil(s).
   d. Route the wiring as necessary for switching power to the contactor(s).

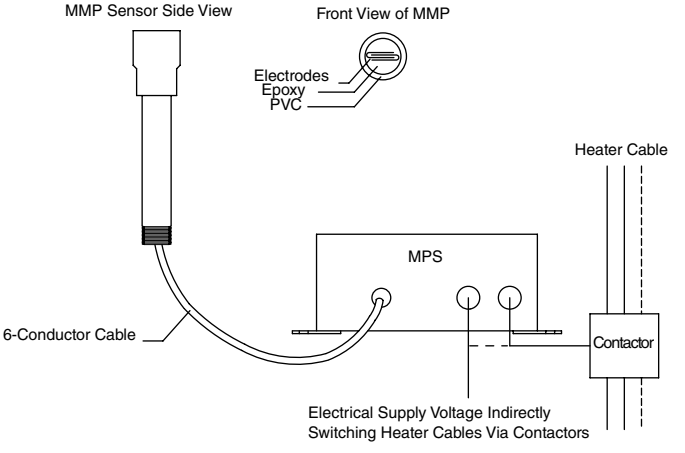


**Detail 3.** Electrical rough-in when contactor panel is switching load

Note: The MPS requires a neutral with any supply voltage.

### 2.3 CONNECTING MMP SENSOR TO MPS CONTROL PANEL

1. Place the MMP sensor in the gutter (when installed for roof deicing control) or an area most indicative of snow conditions (when installed for snow melting control) . Do not locate the MMP sensor under trees, awnings, next to a structure, or in any location which may be blocked from snow.

   The MMP sensor can be attached to a junction box using the supplied .75” (19.05 mm) PVC conduit connector.

2. The MPS system arrives with the MMP sensor attached to the MPS control panel with approximately 10’ (3.04m) of sensor wire. To lengthen or shorten the sensor wire (press on the top of the terminal to release/insert wire):
   a. Remove the six conductors of the sensor wire from the terminal block inside the control panel and loosen the sensor wire connector.
   b. Gently pull the sensor wire through the wire connector and either cut to length as needed or splice on additional extension sensor wire in an appropriate junction box.
   c. Gently pull sensor wire back through the wire connector and reconnect the six conductors to the terminal block.

## Section 2. Installing the MPS

**2.4 INSTALLING THE RID**

1. If installing the optional RID; drill a hole for a .5" (12.7mm) conduit fitting next to the MMP sensor wire connector in the low voltage section of the MPS.
2. Install the .5" (12.7mm) conduit from the MPS to the RID junction box.
3. Install a low voltage three conductor cable or three insulated wires (22 awg minimum) from the MPS to the RID via the conduit.
4. Connect the red, green, and black wires of the RID to the R (red), G (green), and B (black) terminals of the MPS via the three installed conductors.

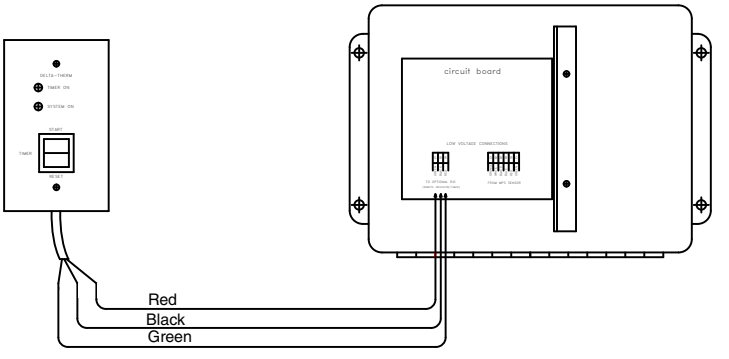


**Detail 4.** Installing the RID

Note: The RID indicates deicing/snow melting system activation and can communicate with the MPS to switch on the deicing/snow melting system via the 75 minute or 5 hour timer setting with the jumper on the back of the RID.

If the deicing/snow melting system is activated by the MMP sensor communicating with the MPS, the RID can not override the MPS to switch the deicing system off.

## Section 3. Testing and Trouble-Shooting

**3.1 SYSTEM FUNCTION CHECK**

**L1 LED light:**
- When blinking continuously indicates a dry MMP sensor
- When not blinking continuously indicates a wet MMP sensor

**L2 LED Light:**
- When lit indicates that the outdoor ambient temperature is below setpoint.
- When unlit indicates that the outdoor ambient temperature is above setpoint.

To verify that power is wired correctly and timing sequence is working:

1. Check that power is connected to the MPS control panel.
2. Disconnect the red sensor wire from the terminal strip and verify that the L2 LED light is lit.
3. Pour water on the MMP sensor face to close the normally open contacts of the output relay on the internal ciruit board and verify that the L1 LED light has stopped blinking.
5. Dry the MMP sensor and verify that the L1 LED light has restarted continuously blinking.
6. To reset the output relay, remove power to the MPS.
7. Reconnect the red sensor wire.
8. Reapply power to the MPS.

(continued on the next page)

## Section 3. Testing and Trouble-Shooting (Continued)

**3.2 TROUBLE- SHOOTING**

1. Verify there is 120 VAC across the red #10 AWG lead wire and the white #14 AWG lead wire inside of the MPS.
2. If switching 208 VAC or 240 VAC ensure a white neutral wire is pulled to the MPS.

Note: For 208 VAC and 240 VAC the controller only switches one power leg, the other power leg (phase leg) passes through the device.

Note: Do not connect the white #14 AWG lead wire to any voltage, it is to be connected to neutral only.

3. Verify the color code of the MMP sensor matches the terminal color code. Do the same if installing the optional RID device.
4. Verify all MMP sensor and RID wiring is intact and ensure no open splices or damage to wire and cable.
5. Verify that the small plastic jumper on the main board is in the left position when installed for roof deicing control and in the right position when installed for snow melting control (attached to left two pins/right two pins).

Note: If the jumper is not attached or present, the MPS will not turn off.

6. Remove the red sensor wire and apply moisture to the three exposed screw heads on the moisture sensor, verify the relay in the MPS energizes and switches power to the heating cable or contactor.
7. If the relay does not energize return the MPS to Delta-Therm. If the relay does energize, the system is functional.

## Section 4. Maintenance

**4.1 MAINTENANCE**

Clean the surface of the sensor before the start of each heating season with a brush or other means to remove dirt, grime, leaves, or debris that obstructs contact with snow or ice.

Perform the system function check before the start of each heating season.