DELTA-THERM.COM

DELTA-THERM

Installation Instructions

2FW CABLE FLOOR WARMING APPLICATIONS

CONTENTS page

SECTION 1. OVERVIEW

1.1 Precautions 2
1.2 Cable and components 2
1.3 General accessories 2
1.4 Tools required 3
1.5 Site plan 3
1.6 Cable storage 3
1.7 Labeling 3
1.8 Cable testing 3
1.9 Site preparation 3
1.10 Proper cable handling 3
1.11 N.E.C. code 3
1.12 Conduit and circuit wire 3

SECTION 2. INSTALLATION

2.1 General information 4
2.2 Cable spacing 4
2.3 Electrical rough-in 5
2.4 Installation 6
2.5 Using the FloorWarner 7
2.6 Embedding over subfloor 8
2.7 Floor coverings 8
2.8 Completing the installation 9

SECTION 3. TESTING AND TROUBLE-SHOOTING

3.1 Pre-installation testing 10
3.2 Monitoring cable during installation 10
3.3 Final testing 10
3.4 Trouble-shooting 10
3.5 Technical support 10

MEMBER Radiant Panel RPA Association est. 1994

Warning: Delta-Therm 2FW cable must be installed by a qualified installer. All assembly, installation, and test instructions must be followed. Improper installation can result in property damage, serious injury, or death due to electric shock. Please call Delta-Therm Corporation at 1-800-526-7887 with any installation or operating questions.

DELTA-THERM Corporation, P.O. Box 345, Wauconda IL, 60084 (847) 526-2407 Fax (847) 526-4456 **(800) 526-7887**

Section 1. Overview

1.1 PRECAUTIONS

Please read these installation instructions and all instructions included with UDG-4999 prior to installation. Observe all warnings. Visually inspect the cable for damage. The cable must not be cut, nicked or worn. Do not install damaged cable.

Installer must be knowledgeable of local electrical codes, electrical installation, and flooring. M.I. cable installation must comply with all electrical codes and building requirements.

- Floor thermostat required.
- 2FW cable must be installed on concrete, mortar, or cement backer board subfloor.
- The braided non-heating 2FW cable cold leads may be shortened, but the product label must remain in the electrical junction box.
- Ensure that the branch circuit breaker is appropriately labeled, and has sufficient capacity to accommodate the 2FW cable load. Delta-Therm recommends using a dedicated circuit.
- 2FW cable is intended for connection to a 15A or 20A branch circuit.
- Limit walking on the 2FW cable.
- Use ground fault protection as required by codes.
- Do not cut or alter the heated section length of the 2FW cable.
- Do not apply power to 2FW cable until the floor has fully cured.
- Do not make splices or field repairs in the 2FW cables without consulting Delta-Therm.
- Do not staple the 2FW cables to the surface, use the ClipStrip strapping or 2FW clips.
- Do not space 2FW cables less than nominal 3” as described or farther than 4” apart.
- Do not pull or twist the 2FW cable in a helix fashion.
- Do not allow space heating cable to extend beyond the room or area in which it originates.
- Do not install 2FW cable in or over walls, or in closets.
- Do not install 2FW cable on wood subfloor or under combustible floor coverings.
- Do not place the splices or heated section of 2FW cable inside of conduit.

1.2 CABLE AND COMPONENTS

Each 2FW cable is supplied with ClipStrip strapping (50’ roll), 2FW clips and screws (large and small).

2FW cable cold lead color code

- 120VAC: Yellow
- 208VAC: Blue
- 240VAC: Red
- 277VAC: Brown

1.3 GENERAL ACCESSORIES

Accessories

Product Number	Description
UDG-4999	Floor Warming Thermostat
PP-GS-75	Galvanized Steel Cable Strapping
PP-SS-75	Stainless Steel Cable Strapping

Product Number	Description
DT-XXPXXX	Enclosed Contactor Panel
LNR-X	Low Noise Relay Panel
FW-CS	Continuity Monitor with Audible Alarm

1.4 TOOLS RECOMMENDED

- Standard electrician's hand tools.
- Floor sensing thermostat.
- Standard electrical fittings and supplies.
- Screwdriver, drill, tin snips, fish tape, and standard hand tools.
- Pencil, marker, or chalk line to mark 2FW cable layout before installing.
- Embedding material, acceptable are: thin-set, self-leveling, and cement.
- Deep electrical junction box, H./W./D. 4"/4"/2" with 3/4" conduit knock-outs and single-gang drywall ring.
- One or more 1/2" thin-walled metal conduit(s), 90 degree standard bends with offset, rigid conduit for cement. 1/2" flexible conduit may also be installed.
- Digital Multimeter, ohmmeter, and insulation resistance meter.
- Cement backer board (for wood subfloor applications)
- 500 VDC insulation resistance tester.

1.5 SITE PLAN

Delta-Therm offers engineered drawing services as outlined in our Price List. If drawings were ordered, please compare the drawing bill of materials to materials supplied with your order and verify that you received all of the Delta-Therm components. Before starting the installation verify the proper location and layout of heating cable(s), control(s), and/or accessories.

1.6 CABLE STORAGE

All 2FW cables should be stored in a cool, dry location. Cables should be protected from damage. Following the cable testing instructions in section 3, test all cables removed from storage and record the readings on the warranty card.

1.7 CABLE LABELING

Delta-Therm 2FW cables are UL listed for radiant heating installations. Each cable has a UL label attached to the cold lead.

1.8 CABLE TESTING

Please refer Section 3 for all cable testing procedures.

1.9 SITE PREPARATION

Review installation, engineering, electrical, and or architectural drawings prior to installation. Verify that available voltage is the same as the cable operating voltage indicated on the UL or CSA label. Install conduit from the cable feed points to an indoor or dry junction box, continuing to the power panel per site plan. Install appropriate grounding system per prevailing electrical code.

1.10 PROPER CABLE HANDLING

Always unroll the coil of 2FW cable. Do not pull the cable in a helix fashion. The 2FW cable is supplied on a spool. The heated section of the 2FW cable is wrapped around the lower reel and the cold leads are wrapped around the upper reel. The heated section of the 2FW cable is black and the cold leads are braided. The two sections are factory spliced. Do not cut heated section of 2FW cable.

1.11 NEC CODE

Please consult NEC Article 424, "Fixed Electric Space-Heating Equipment" Article 424.44 Installation of Cables in concrete or Poured Masonry Floors.

1.12 CONDUIT AND CIRCUIT WIRE

The cables require a permanently wired and grounded conduit system. Use only UL Listed (CSA Certified) weatherproof junction boxes.

Section 2. Installation

2.1 GENERAL INFORMATION

Before starting the installation please refer to Section 1.5 Site Plan, Section 1.9 Site Preparation, and test cables following the directions in Section 3.1 Pre-Installation Testing. If you don't have a site plan you can make your own layout. The final layout should include the 2FW cable, millwork, built-in fixtures such as toilet, bathtub, shower, etc.

2.2 CABLE SPACING

Locate your 2FW cable part number and heated cable length on the 2FW Cable Selection Chart. Use the cable spacing formula to calculate your ClipStrip strapping tab spacing.
S = (Ax12)/L
S = Spacing in inches between each cable run
A = Square feet of open floor area
L = Heated length of 2FW cable in feet (refer to 2FW Cable Selection Chart below)

Example Calculating Cable Spacing
24FW-084
Open Floor Area (A) = 91 Sq. Ft.
Heater Length (L) = 312'
Voltage = 240
(91 Sq. Ft. x 12)/312' = 3.5"

Sample Spacing Patterns

3.25" spacing = 3-3-3-4 repeating
3.50" spacing = 3-3-4-4 repeating
3.75" spacing = 3-4-4-4 repeating
4.00" spacing = 4-4-4-4 repeating
4.25" spacing = 4-4-4-5 repeating
4.33" spacing = 4-4-5 repeating

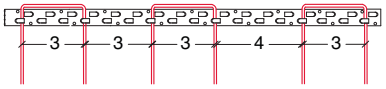

3.25" SPACING PATTERN
3-3-3-4 REPEATING

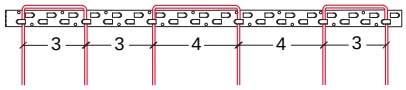

3.50" SPACING PATTERN
3-3-4-4 REPEATING

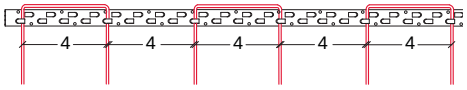

4" SPACING PATTERN
4-4-4-4 REPEATING

2FW Cable Selection Chart

	Area to be Heated	Cable Part#	Amps	Cable Resistance (Ohms)	Heated Length
120 Volt	8 - 12 Sq. Ft.	12FW-008	1.0	109	31'
	13 - 17 Sq. Ft..	12FW-013	1.6	69	48'
	18 - 24 Sq. Ft.	12FW-017	2.1	54	62'
	25 - 32 Sq. Ft.	12FW-025	3.0	37	90'
	33 - 40 Sq. Ft.	12FW-033	3.9	28	116'
	41 - 51 Sq. Ft.	12FW-041	5.0	22	150'
	52 - 63 Sq. Ft.	12FW-052	6.5	17	185'
240 Volt	16 - 24 Sq. Ft.	24FW-016	1.0	218	62'
	25 - 34 Sq. Ft.	24FW-025	1.6	139	96'
	35 - 49 Sq. Ft.	24FW-035	2.1	108	124'
	50 - 66 Sq. Ft.	24FW-050	3.0	74	180'
	67 - 83 Sq. Ft.	24FW-067	3.9	56	232'
	84 - 103 Sq. Ft.	24FW-084	5.0	44	300'
	104 - 124 Sq. Ft.	24FW-104	6.2	35	370'

Contact Delta-Therm for 208 volt and 277 volt cable selection

2.3 ELECTRICAL ROUGH-IN

1. Use the established location of the electrical supply in the room to be heated as your starting point. Each 2FW cable must begin where power is supplied.
2. Install a deep electrical junction box, H./W./D. 4”/4”/2” with 1/2” conduit knock-outs and a single gang drywall ring mounted vertical 58” above finished floor height.
3. Notch the 2” x 4” plate beneath the electrical junction box for the 90 degree conduit bend to sit below the floor surface. Notch deep enough for the embedding material to lay flush.
4. Install at least one 1/2” thin-walled metal conduit from the electrical junction box to the floor. Use rigid conduit for cement.
5. Bend one end of the metal conduit on a 90 degree angle. The conduit may require an offset to position it in the wall.
6. Install the 90 degree bend in the floor notch and connect the conduit to the junction box. 1/2” flexible conduit may also be used.
7. The UDG-4999 thermostat is supplied with a thermistor sensor to be embedded in the floor to measure floor temperature.

   The thermistor sensor can be installed in 1 of 3 ways:
   1. in conduit to protect it from damage during installation.
   2. in a stubbed conduit and clipped to the subfloor with a small 2FW clip.
   3. not installed in any conduit and clipped to the subfloor with a small 2FW clip.
8. Repeat Steps 3 and 4 if the thermistor sensor is being installed in conduit.
9. Connect power feed to electrical junction box.

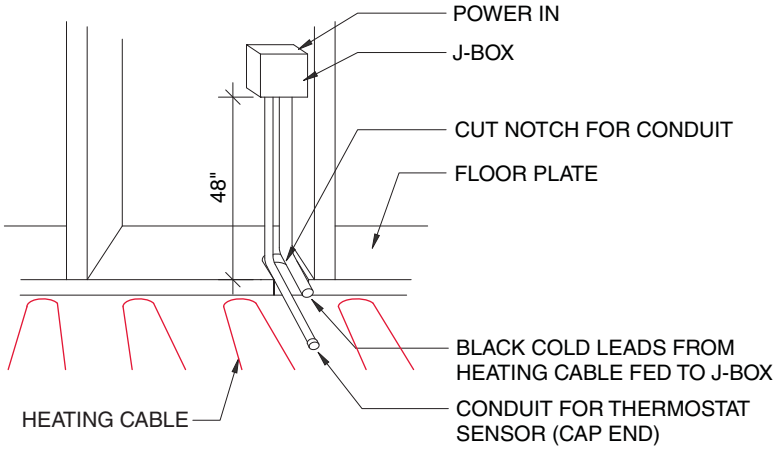

Detail 1. Typical 2FW cable electrical rough-in.

2.4 INSTALLATION

1. Attach a length of strapping (with the tabs facing up) parallel to the longest unobstructed wall and 5” in from the wall. Secure strapping every 12” to 16” with the supplied screws. Cut another length of strapping to run parallel against the opposite wall. Install this length of strapping 2” in from the wall. For wide rooms strapping or clips shall be installed across the center of the room on 6’ centers maximum. This ensures cable spacing and prevents overlapping of cables.

   NOTE: Use adequate number of clips and strapping to maintain cable spacing. Do not allow cable to crossover itself.

2. Before installing the 2FW cable, clear all surfaces on which the 2FW cable is to be fastened of sharp edges and debris. Place the 2FW cable spool on a wire caddy or use .5” conduit and ladder as a wire caddy.

3. Start your initial 2FW cable run at the power supply. Feed the leading cold lead up through the 1/2” conduit to the junction box. Leave approximately 6” of leading cold lead extending beyond the opening of the conduit and secure cold lead to surface 2” in from the wall with a large 2FW clip.

4. Run the 2FW cable 2” in from the perimeter wall to the farthest corner of the room. Lay 2FW cable runs at calculated spacing to fill in open floor space. Do not bend the tabs to secure 2FW cable in place. As you near the end of laying the 2FW cable runs, evaluate the remaining 2FW cable length and remaining area. 2FW cable spacing can be adjusted in low traffic areas and around the perimeter of outdoor facing walls.

   If there is a shortage of 2FW cable at this point you can space the 2FW cables further apart or omit areas that are low traffic. If there is an excess of 2FW cable at this point you can tighten 2FW cable spacing across the entire area, in low traffic areas, or around the perimeter of outdoor facing walls. For short heating cables reduce or remove loops in areas not subject to foot traffic

   NOTE: Do not cut, alter, or shorten the heating section of the cable. Always heat areas that will be in contact with feet.

5. Verify that 2FW cable layout is complete before shortening the cold lead. Cut braided cold lead leaving approximately 6” sticking out of the junction box.

6. Uncomb 3” of the braid and twist into a cold lead leaving the red insulated wire exposed. Strip back .5” of insulation for the power connection.

7. Retest 2FW cable following the instructions in Section 3. DO NOT APPLY POWER TO THE 2FW CABLE AT THIS TIME.

8. Attach the Delta-Therm FloorWarner. Refer to next page for instructions for using FloorWarner.

   NOTE: FloorWarner test does not substitute for 2FW cable continuity or insulation resistance testing.

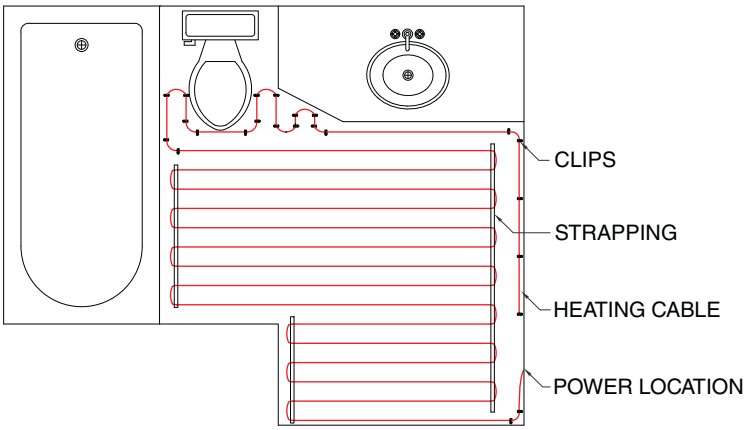

Detail 2. Typical 2FW cable layout.

2.5 USING THE FLOOR WARNER

1. Momentarily switch ON the FloorWarner to ensure the alarm will sound.
2. Attach the ground wire from the junction box to the FloorWarner terminal with the green wire leading to the other side of the terminal.
3. Connect the one inner cold lead to the terminal with the black lead wire connected to the other side of the terminal.
4. Connect the other inner cold lead with the red lead wire connected to the other side of the terminal.
5. Turn the FloorWarner slide action switch to the ON position, the test unit should be silent.
6. Use a jumper wire to touch the terminal screw of the green terminal to the terminal screw of the red terminal. The FloorWarner's audible alarm should sound.
7. With the FloorWarner switched ON, remove the orange cold lead cable from the red terminal. The audible alarm should sound. Reconnect the wire and the alarm should stop.

Note: If using PVC conduit, connect green terminal to ground wire from conduit body.

Note: FloorWarner test does not substitute for M.I. cable continuity or insulation resistance testing.

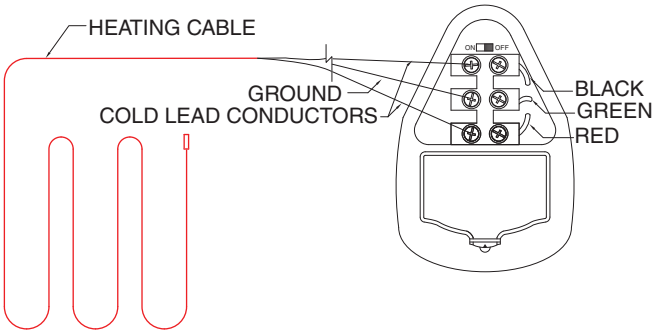

Detail 3. FloorWarner wiring diagram.

2.6 EMBEDDING OVER SUBFLOOR

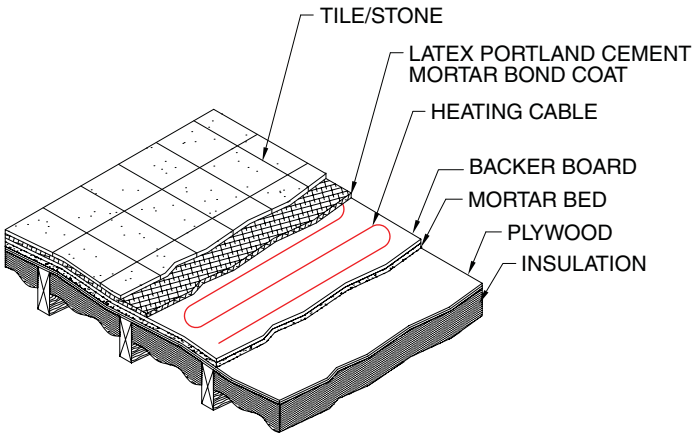

Detail 4. 2FW cable embedded over backer board with tile floor covering.

Embed the 2FW cable in a thin skim coat layer of thin set or other mortar. Thin set tile, marble, or stone over the skim coat layer. Please verify the curing time with the embedding material manufacturer and do not turn the floor warming system on until the cure time has elapsed.

2.7 FLOOR COVERINGS

Total combined flooring R-Values are not to exceed R-2.5. R-values for flooring material are available from the flooring manufacturer or other sources such as the Radiant Professionals Alliance (RPA).

Material	R-Value
Tile	R-0.25
Wood Flooring	R-0.75
.5” thick Carpet	R-1.4
.75” thick Carpet	R-2.1

NOTE: The floor covering directly on top of the embedding layer must be of non-combustible material (tile, marble, stone, cement, gypcrete, etc) and at least .25” in thickness. Do not install combustible flooring (wood, carpet, etc.) directly on top of a .25” embedding layer.

2.8 COMPLETING THE INSTALLATION

After the flooring has been installed, remove the FloorWarner and recheck continuity and complete all wiring. Follow the instructions included with the UDG-4999 thermostat. Energize the 2FW cable after the floor has properly cured and allow sufficient time for the floor temperature to rise.

2.9 COMPLETING THE INSTALLATION

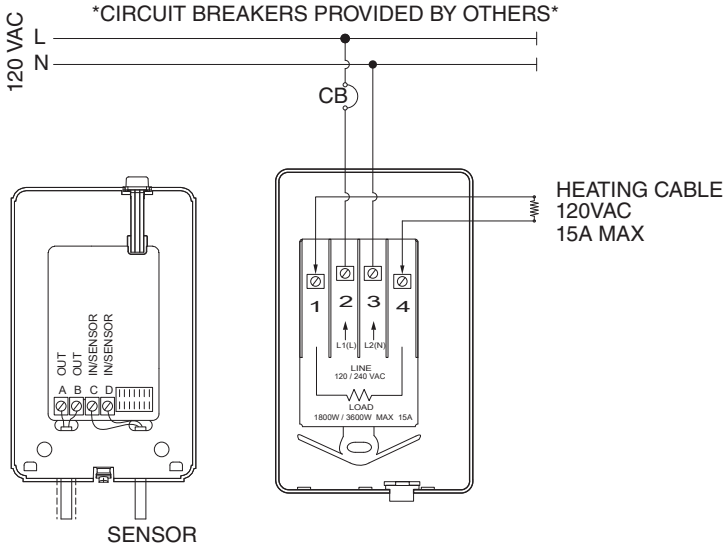

Detail 5. UDG-4999 thermostat 120 VAC wiring diagram.

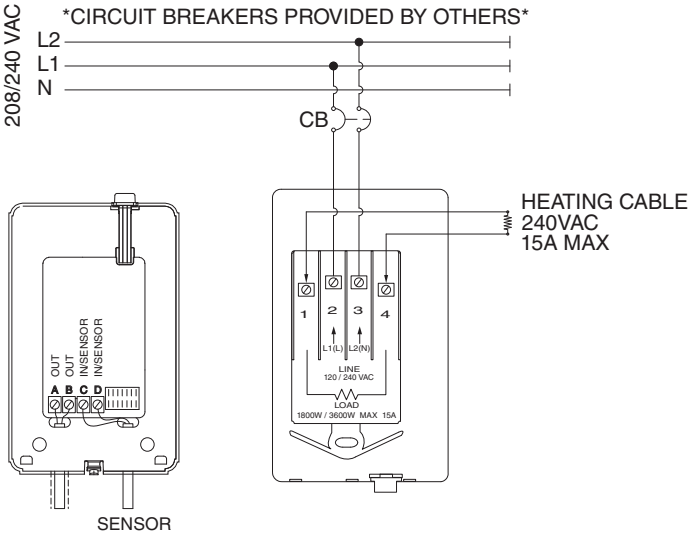

Detail 6. UDG-4999 thermostat 208/240 VAC wiring diagram.

Section 3. Testing and Trouble Shooting

3.1 PRE-INSTALLATION TESTING

Unpack the M.I. cable and test each cable for insulation resistance (IR), and total resistance (TR).

To test TR, connect each lead of the ohmmeter to each M.I. cable cold lead conductor. Test in accordance with the meter manufacturer's instructions. Compare TR reading from ohmmeter to calculated TR (multiply the heated length of cable by the cable resistance value found on UL/CSA label). The ohmmeter reading should be within 10% of the calculated TR.

To test IR, connect one lead of the 500 VDC insulation resistance tester to one cold lead conductor and the other lead to the M.I. cable metal sheath. Test in accordance with the meter manufacturer's instructions. IR reading should be greater than 10 megohms.

Please enter the TR and IR readings on the warranty card.

3.2 MONITORING CABLE DURING INSTALLATION

Repeat the steps as described in Section 3.1 and enter the information on the warranty card. If there is a change in the meter reading, please check the cable for damage, as well as any power connections, splices, and end terminations.

3.3 FINAL TESTING

Repeat the IR test steps as described in Section 3.1. To test TR, connect each lead from the ohmmeter to the two cold leads that will be attached to power. Enter the information on the warranty card. If there is a change in the meter reading, please check the cable for damage, as well as any power connections, splices, and end terminations.

3.4 MAINTENANCE

Annually check system for loose or damaged cable.

3.5 TROUBLE-SHOOTING AND TECHNICAL SUPPORT

If during any test the meter readings vary by +/- 10% from the previous test, stop the installation and investigate. Please check for pinched or crushed cables, test splices, test power connections, test end terminations, and repair accordingly. Check for water in all junction boxes or conduit. Any faults should be repaired by a qualified electrician or factory technician before the final pour is made.

For additional trouble-shooting and repair procedures, please contact Delta-Therm technical support at 1-800-526-7887. Please be prepared to provide:

- Part numbers for all installed equipment
- IR and TR readings on all installed cables
- Verification that incoming voltage matches design voltage of Delta-Therm equipment
- Verification that you have checked all wiring, junction boxes, etc.
- Digital photos of installed equipment

If you have any questions or comments about these instructions or your installation please call Delta-Therm at 1-800-526-7887.