DELTA-THERM.COM

DELTA-THERM

ETK-IN-5

Industrial (IN) Series End Termination Kit

WARNING

This kit and the cable used with it must be installed by a qualified electrician. All assembly, installation, and test instructions must be followed. Improper installation can result in property damage, serious injury, and/or death due to electric shock and fires. Please call Delta-Therm Corporation at 1-800-526-7887 with any installation or operating questions.

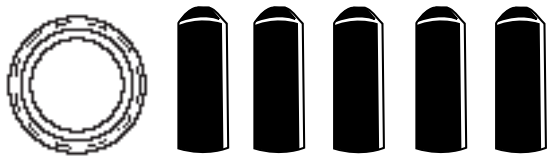

A Fiberglass Tape **B** Heat Shrink Caps (5)

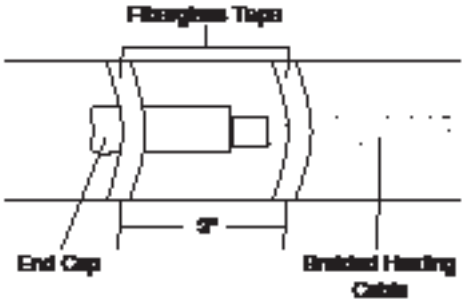

Detail 1.

WARNING

When applying heat shrink sleeves, ensure that you heat the entire surface area of the sleeve so that the water-proof adhesive melts evenly and the outer jacket adheres properly to the cable. Delta-Therm recommends that you use a heat gun to accomplish this. If you must use a torch, do so only with the greatest care to avoid melting the outer jacket. Failure to properly heat the waterproof sleeve may allow moisture to enter the self regulating cable core. If the core is then energized, arcing may occur, which may cause the core to ignite. Once ignited, the core may continue to burn even after power is shut off, possibly causing a fire and damaging property.

DESCRIPTION

The ETK-IN-5 kit allows you to make five end termination on IN Series cables. The kit is FM approved and CSA certified.

CONTENTS

A. 5 Heat Shrink Cap

B. 1 Roll of Fiberglass Tape (.5" x 15')

TOOLS REQUIRED

- Linesman's Pliers
- Utility Knife
- Heat Gun Or Torch

TERMINATING THE CABLE

CAUTION: Do not terminate self regulating cable by connecting the two bus wires. Connecting the two bus wires will destroy the cable.

3. Remove 3" of any optional overjacket and braiding.
4. Cut the end of the heating cable at a 45° angle.
5. Slide the end cap over the cable end, then apply heat to shrink the cap. Heat until glue begins to flow from cap
6. Using fiberglass tape, fasten the heating cable and end cap to the pipe (Refer to Detail 1).

FM APPROVED

DELTA-THERM Corporation, P.O. Box 345, Wauconda IL, 60084 (847) 526-2407 Fax (847) 526-4456 **(800) 526-7887**