DELTA-THERM.COM

DELTA-THERM

PCK-RGP

CO Series Power Connection Kit For Roof And Gutter De-Icing

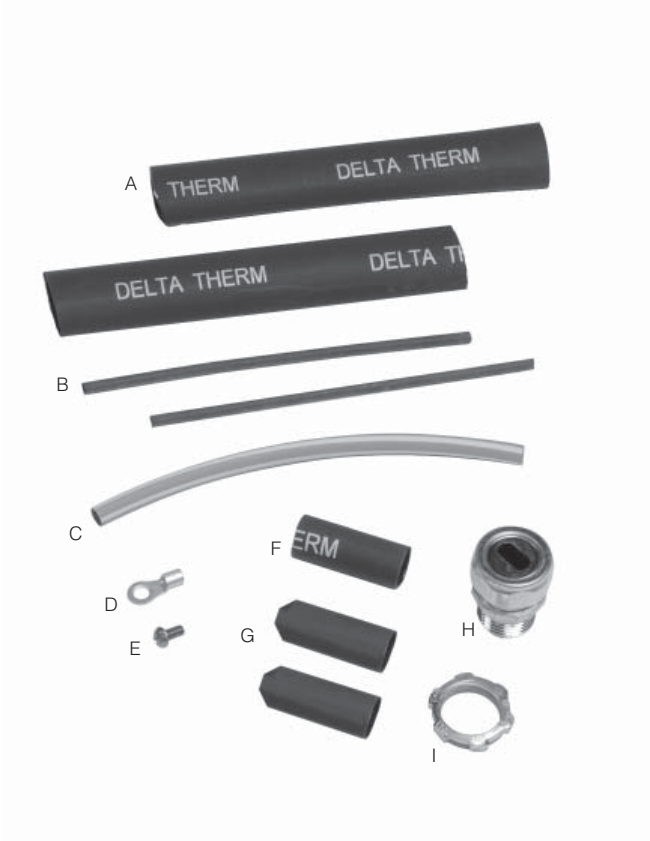

A. Heat Shrink Sleeve .75" x 6" (2 x 15cm) (2)
B. Shrink Sleeve .125" x 5.5" (.3 x 14cm) (2)
C. Yellow/Green Shrink Sleeve .25" x 5.5" (1 x 14cm)
D. Ring Connectors
E. Ground Screw
F. Heat Shrink Sleeve .5" x 1.5" (1 x 11cm)
G. Heat Shrink Cap .5" x 1.5" (1 x 11cm) (2)
H. Connector Assembly
I. .5" (1cm) Locknut

DESCRIPTION

PCK-RGP allows you to make electrical connections for all CO Series CBT self-regulating heating cables used in roof and gutter applications. The kit contains the necessary materials (except weather-tight junction box) for one power connection and two end terminations.

SR CABLE CUTAWAY

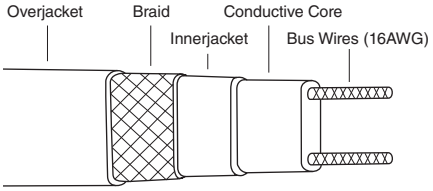

Detail 1.

CONNECTING TO POWER

1. Attach connector assembly to the Junction Box through a .5" (1cm) NPT fitting.
2. Prepare cable per directions.
3. Insert cable through sealing fitting and tighten components into place.
4. Connect heating cable leads to power wire leads. Ground braid cold lead to ground wire or to grounding screw with ring terminal.
5. Install water tight cover.

DELTA-THERM Corporation, P.O. Box 345, Wauconda IL, 60084 (847) 526-2407 Fax (847) 526-4456 **(800) 526-7887**

WARNING

WARNING: This kit and the cable used with it must be installed by a qualified electrician. All assembly, installation, and test instructions must be followed. Improper installation can result in property damage, serious injury, and/or death due to electric shock and fires. Please call Delta-Therm Corporation at 1-800-526-7887 with any installation or operating questions.

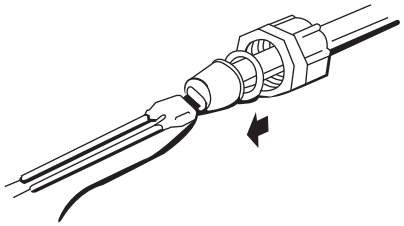

Detail 2. Slide sealing fitting components to position at core sealer.

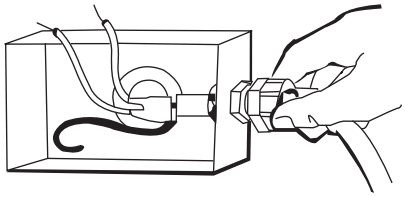

Detail 3. Insert heating cable through sealing fitting and tighten components into place.

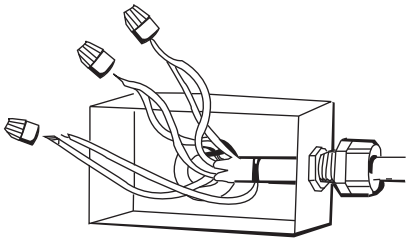

Detail 4. Connect heating cable leads to power wire leads. Ground braid cold lead to ground wire or to grounding screw and ring terminal.

CABLE PREPARATION

1. Slide connector compression ring and grommet onto heating cable.
2. Score and remove 6.5" (17cm)of the black overjacket to expose the braid.
3. Carefully separate 6.5" (17cm) of braid back to overjacket. Then twist the braid into a cold lead.
4. Remove 6" (15cm) of innerjacket from the end exposing the black conductive core.
5. Cut inner core and separate back to the innerjacket. Remove cover material from bus wires. Retwist bus wires.
6. Install .125" x 5.5" (.3 x 14cm) heat shrink tubes over bus wire and shrink.
7. Core Sealer: Install .5" x 1.5" (1 x 4cm) heat shrink tube over bus wires and innerjacket. Shrink and while still hot pinch with pliers between bus wires to seal.
8. Slip green/yellow tube over braid and shrink. Trim to remove tapered end.
9. Slide sealing fitting components to position at core sealer.
10. Install sealing fitting into junction box.
11. Insert heating cable through sealing fitting and tighten components into place.
12. Connect heating cable leads to power wire leads. Ground braid cold lead to ground wire or to grounding screw and ring terminal.
13. Install weathertight cover.

END CAP TERMINATION

1. Score and remove 3" (8cm)of the outer jacket from the end of the heater.
2. Slide the braid back from the end of the heater and cut about 1.5" (4cm) squarely off the end of the heater, making sure the conductors are not in contact with each other.
3. Slide a heat shrink cap over the end of the heater allowing 1" (3cm) to cover the heater.
4. Apply heat to shrink the sleeve around the heater. Heat until glue begins to flow from cap.
5. Slide the braid over sealed shrink sleeve and twist end of braid into a cold lead.
6. Slide the .75" x 6" (2 x 15cm) long piece of shrink sleeve over the braid so that .5" (1cm) extends out past the end of the cold lead.
7. Apply heat to shrink the sleeve around the heater and braid. While the sleeve is still hot, squeeze with needle nose pliers and hold together until cool to seal the shrink sleeve end. If end does not remain visibly sealed when pliers are re moved, repeat this sealing step. The end must remain visibly sealed when the pliers are removed.